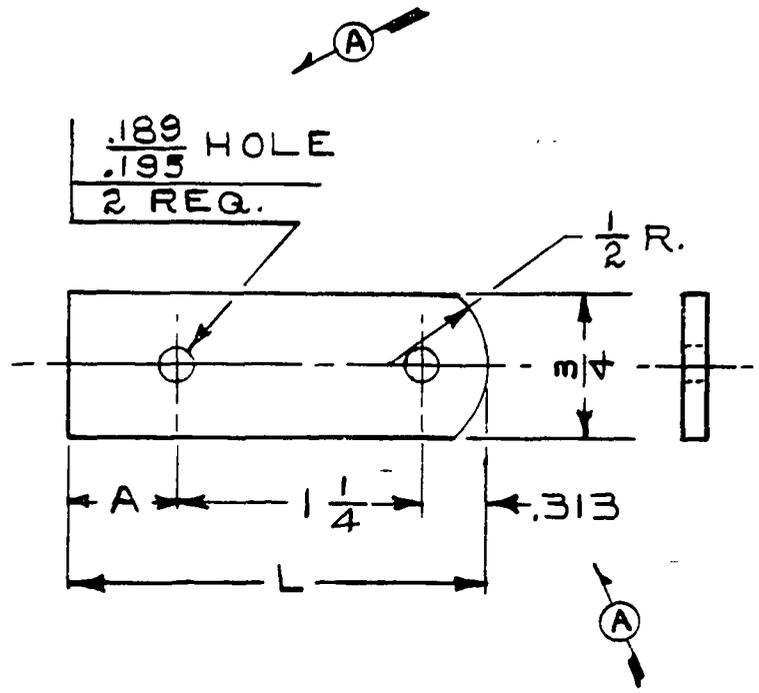

PART NO.	L	A
41271	2 1/8	9/16
41271-2	2 1/2	15/16
41271-3	2 7/16	7/8

				T&B	1	41195		
				LAB	1	41195		
				LAA	1	41195		
D	2 1/2 WAS 2 9/16, 15/16 WAS 1 ON -2	12-6-50	HRK	LS	1	41195		
C	-2 & -3 ADDED	3-21-49	R.M.	MODEL	PER PLANE	NEXT ASSEMBLY	SUPERSEDES	SUP. BY
B	REDRAWN WITHOUT CHANGE	4-24-44	V.P.					
A	DIMENSIONS REVISED	5-11-43	C.E.K.					
LET.	REVISION	DATE	BY					

PART No.	No. REQ.	SIZE	DESCRIPTION
		.125 x 3/4 x NOTED	#1025 STEEL
		MATERIAL	

SCALE FULL SIZE | TOTAL WT.—LBS.

FINISH—PIPER SPECIFICATION #10

MANUFACTURING PRACTICES—PIPER SPECIFICATION #9

LINK — ELEVATOR HORN LOWER

PIPER AIRCRAFT CORP.
LOCK HAVEN, PENNA.

DRAFTSMAN	CHECKER	STANDARDS
11-10-41	R.C.M.	
W.E.S.	11-10-41	

41271